LET'S IMPROVE TOMOTIVE COMMUNICATIONS

One of the most frustrating things that can happen when a technician is trying to diagnose a concern is to find a lack of communication with the module or modules he is trying to diagnose. In most cases, there are some simple tests that can be done to quickly determine why a module is not communicating.

Let's start with the most simple, yet very common issue: Check power to the data link connector. In many cases, Ford uses the same fuse for the data link connector and the cigarette lighter, so it is fairly common for that fuse to be blown. Power will always be on pin 16, the bottom, far right pin of the data link connector. Power loss will affect all the modules, and if there is a lack of power to the data link connector, none of the modules will communicate.

If only one module has lost communication, test the communication circuits. There are many communication systems. But this article will only cover the standard corporate protocol (SCP) and the Controller Area Network (CAN). SCP is used in earlier model Ford vehicles with OBD-II systems. CAN is used on most current model year Ford vehicles, and for this article, will cover only the high speed CAN.

For a quick check of the SCP network, simply put your voltmeter across the SCP pins at the data link connector (See Figure 1 below).

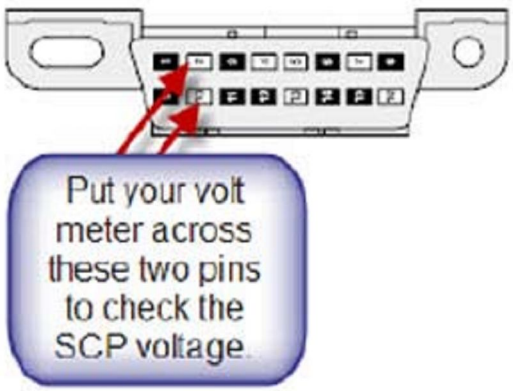

Illustrations courtesy of Ford Motor Co.

SCP voltage will usually range between 4.5 and 5.0 volts. If there is no voltage present at these pins when the key is on, unplug one module at a time until this voltage returns. In some cases, a shorted module will load down the network. If the voltage is low no matter what module is unplugged, there is likely SCP wiring damage. There needs to be at least one module plugged into get the voltage on the network.

When testing the CAN network, both voltage and resistance can be checked (See Figure 2 below).

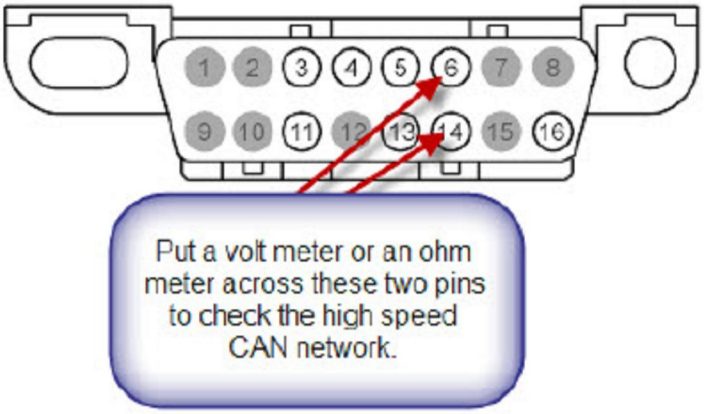

When checking voltage, the CAN network will normally be around 2.5 volts. When checking resistance, ensure the key is off; the resistance of the CAN network will be around 60 ohms. An explanation of this resistance can help diagnose a high speed CAN problem.

On a Ford vehicle, there are two termination resistors on the CAN network. These resistors are usually found in the Powertrain Control Module (PCM) and the instrument cluster. Each resistor is 120 ohms. When they are put together on the network, the network will show 60 ohms. With this information, if you check the resistance and it reads 120 ohms, you know one of the modules is not on the network. Simply unplug the cluster or the PCM to see which one is on the network. Low resistance values will usually indicate a shorted CAN circuit, or a shorted CAN module. Unplug all the modules except the PCM and the instrument cluster and then see, if at any point, the resistance returns to 60 ohms. High resistance will usually indicate a connector issue, corrosion, or wiring issue.

Continued on Page 2

Some simple things to keep in mind that you may find helpful:

- I have seen temperature related intermittent faults support the climate control module, and with that shorted, the entire network shut down. By unplugging the climate control module, the network came back online. I have seen wheel speed sensors do the same thing to the ABS module.

- I have also seen multiple faults that are communication cascade other modules not to communicate. For example, a 4x4 module, that communicates fine, shut down the instrument cluster and the vehicle security module. With the 4x4 module unplugged, they both started to work again.

At the end of the day, what seems complicated usually comes down to simply unplugging components until the resistance or voltage comes back into specification.